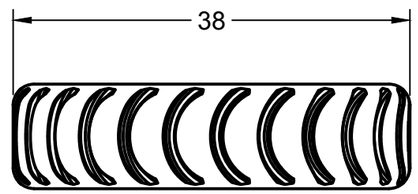

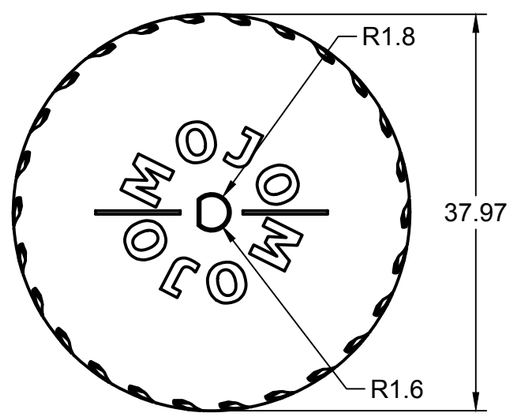

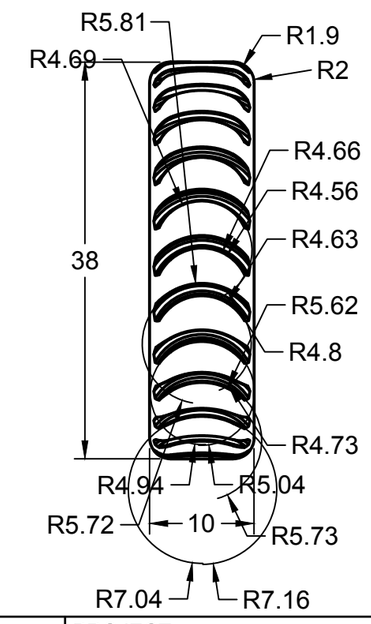

	PROJECT Open STEM Project				
	TITLE M.O.J.O. Propel				
APPROVED	SIZE	CODE	DWG NO		REV
CHECKED	B		1/1		3
DRAWN Matthew Jeide 4/19/26	SCALE 1.75:1 (From parent)	WEIGHT		SHEET 1/1	